MODULE V

BIPOLAR JUNCTION TRANSISTORS AND POWER DEVICES

BJT - Common Emitter, Common Base and Common Collector configurations

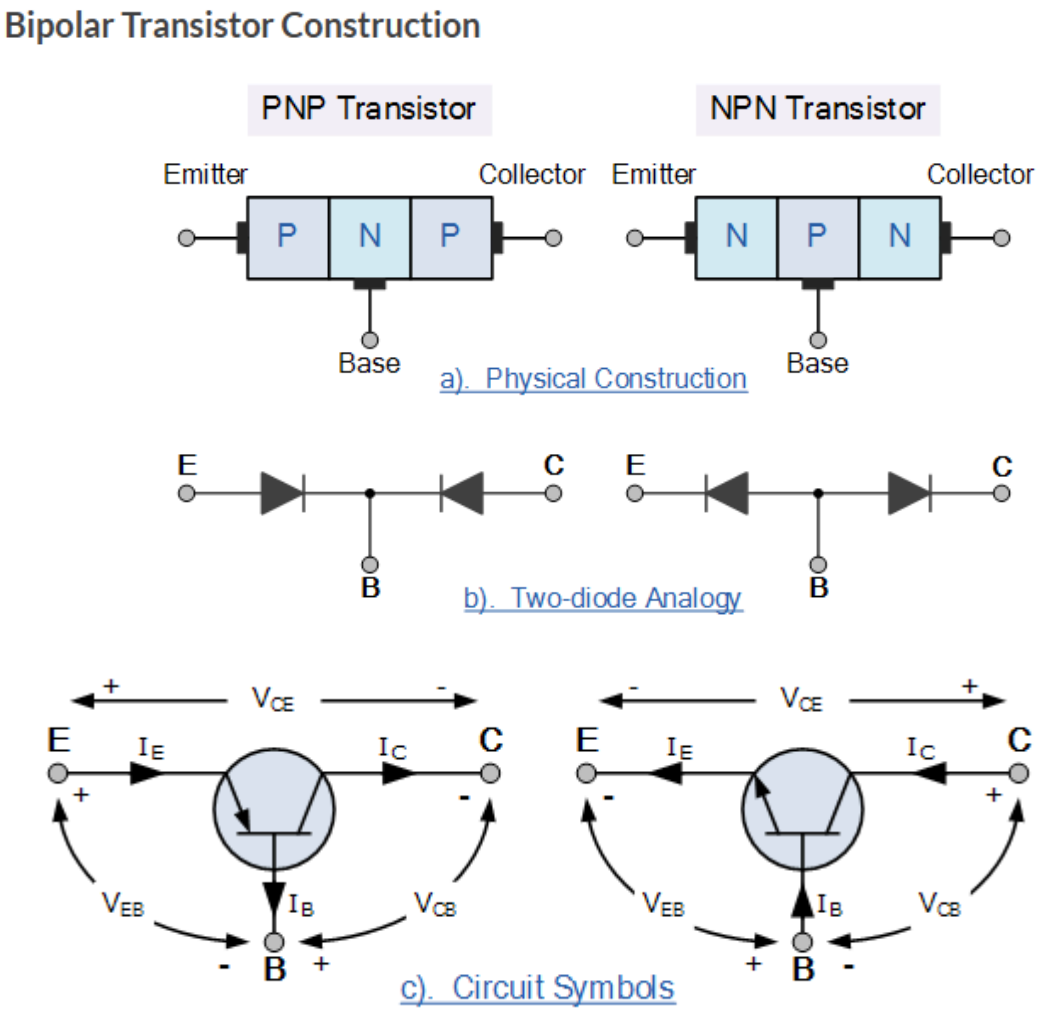

Common Base (CB) Configuration

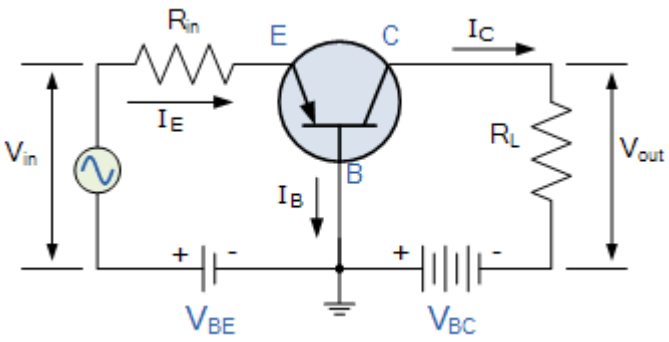

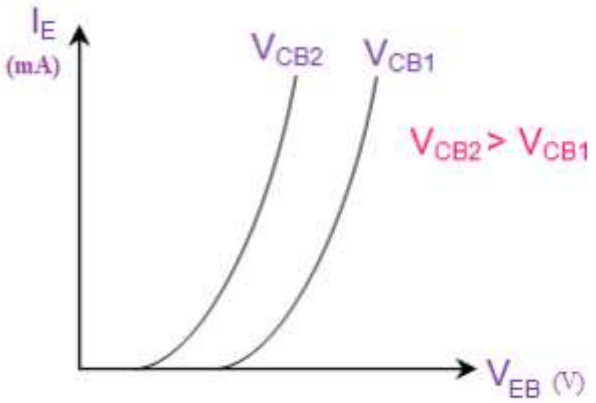

Input Characteristics of CB configuration

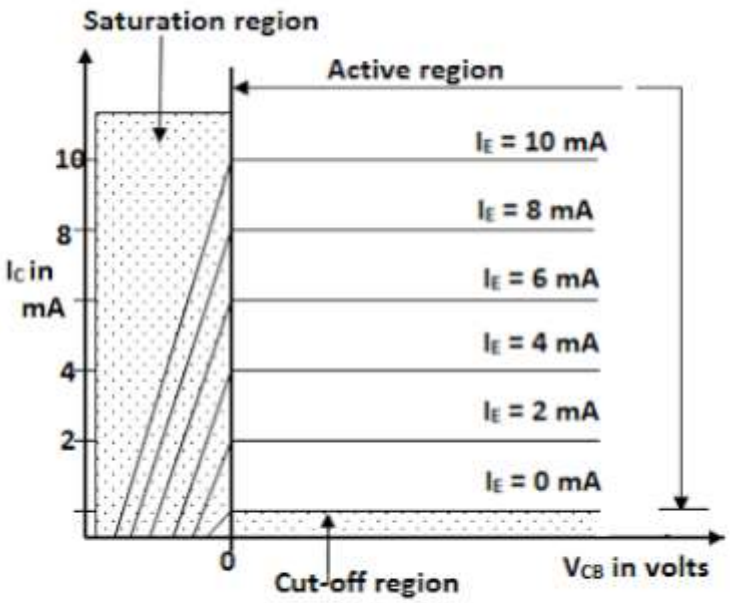

Output characteristics of CB configuration

Common Emitter (CE) Configuration

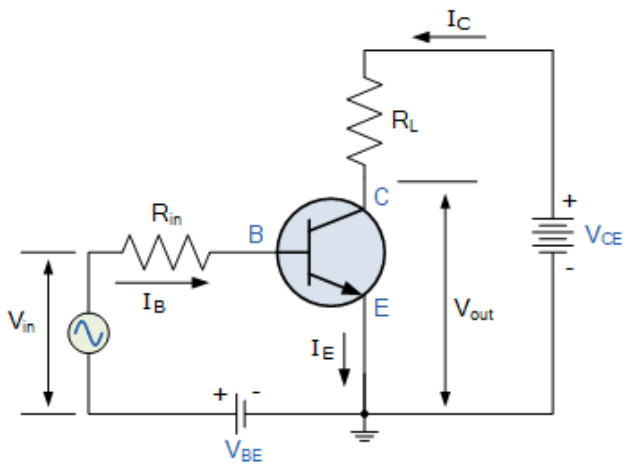

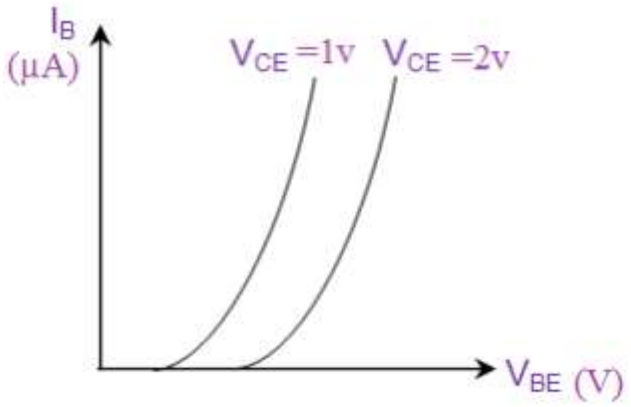

Input characteristics of CE configuration

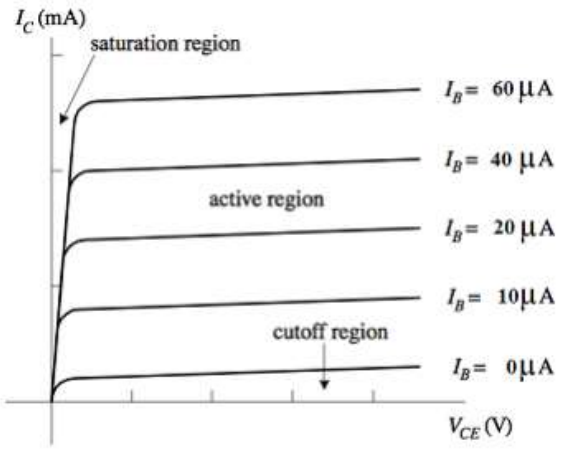

Output characteristics of CE configuration

Common Collector (CC) Configuration

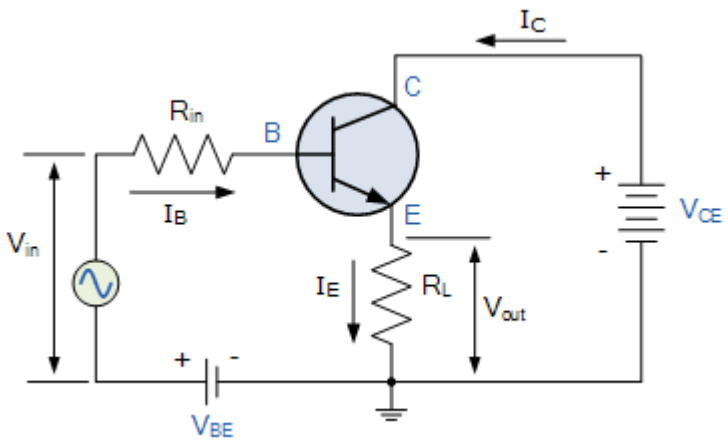

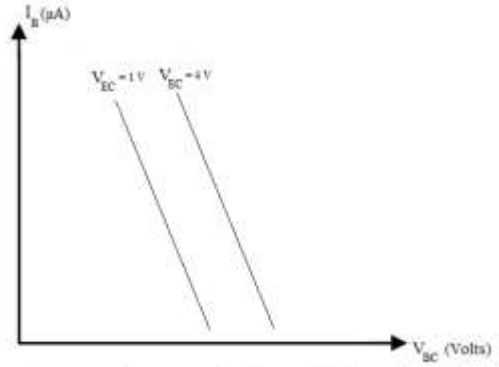

Input characteristics of CC Configuration

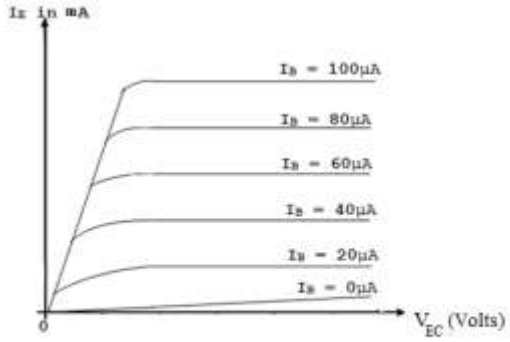

Output characteristics of CC Configuration

The Relationship Between Bipolar Transistor Currents and Gains

$I_E = I_B + I_C$ $I_C = I_E - I_B$ $I_B = I_E - I_C$	$\alpha = \frac{I_C}{I_E} = \frac{\beta}{1+\beta}$ $\beta = \frac{I_C}{I_B} = \frac{\alpha}{1-\alpha}$
$I_B = \frac{I_C}{\beta} = \frac{I_E}{1+\beta} = I_E(1-\alpha)$	
$I_C = \beta . I_B = \alpha . I_E$	$I_E = \frac{I_C}{\alpha} = I_B(1+\beta)$

Characteristic	Common Base	Common Emitter	Common Collector
Input Impedance	Low	Medium	High
Output Impedance	Very High	High	Low
Phase Shift	0°	180°	0°
Voltage Gain	High	Medium	Low
Current Gain	Low	Medium	High
Power Gain	Low	Very High	Medium

Silicon Controlled Rectifier

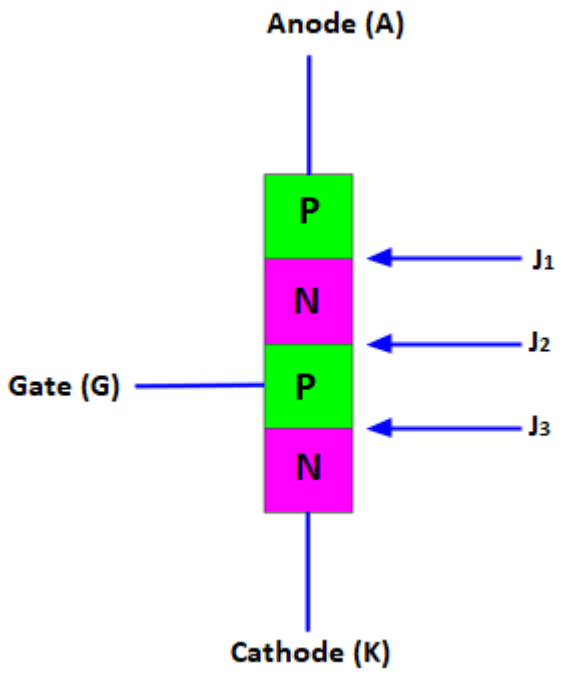
Anode (A)
P
N
P
N
J1
J2
J3
Gate (G)
Cathode (K)

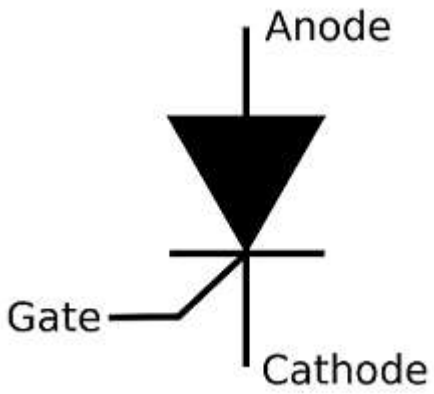
Anode
Gate
Cathode

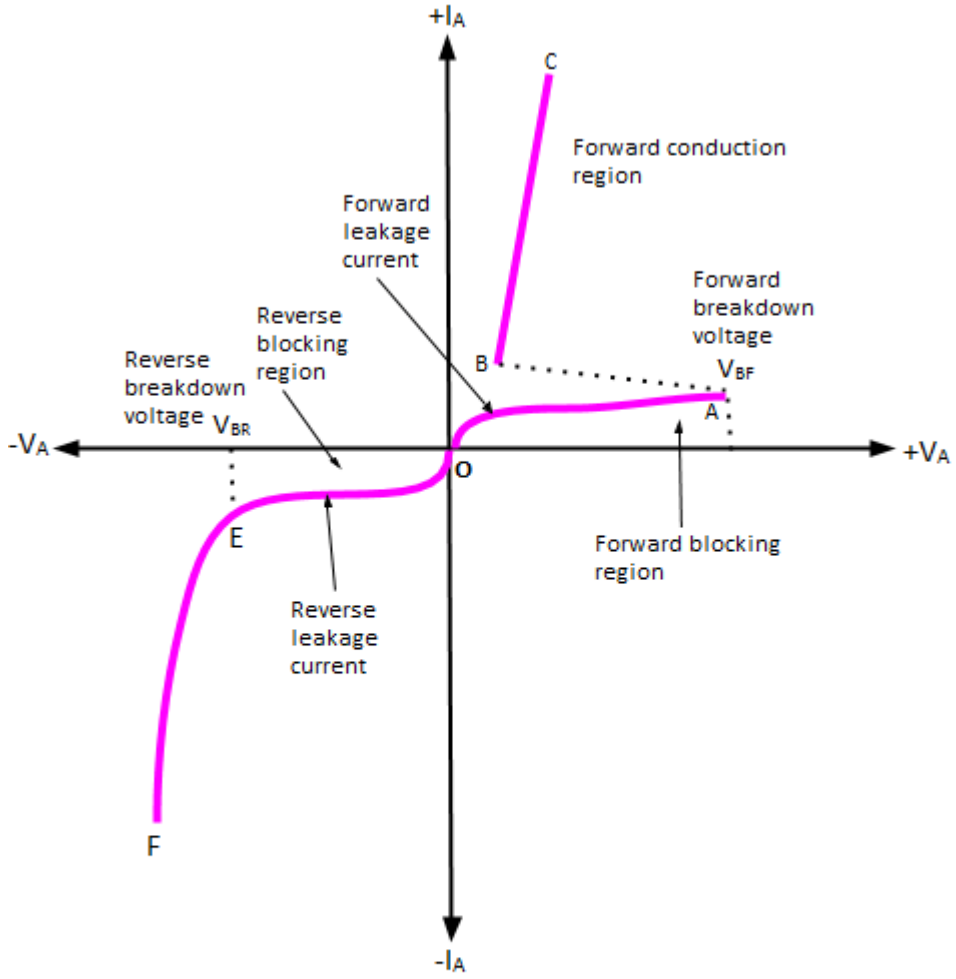

V-I Characteristics of SCR

Triac

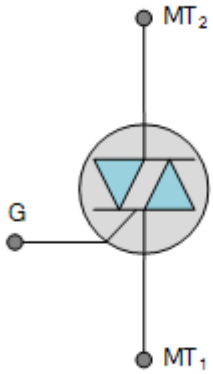

Typical Triac I-V Characteristics Curves

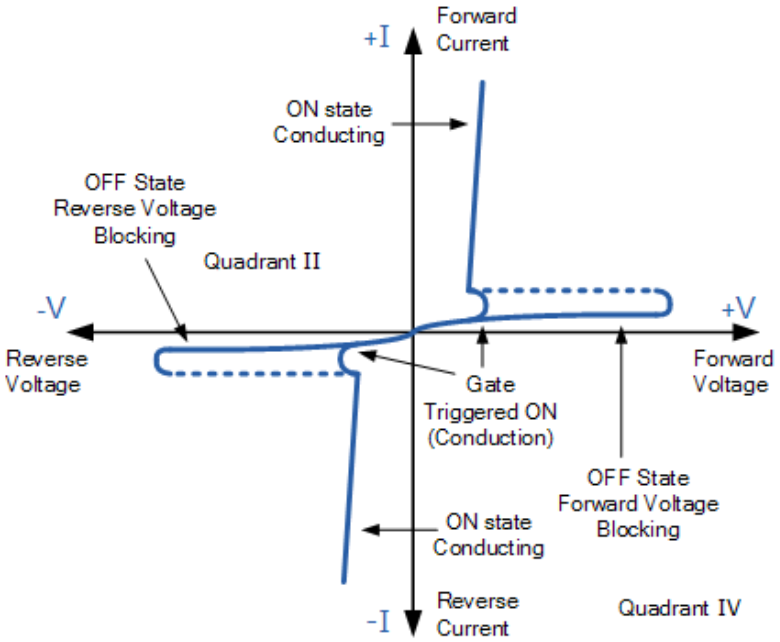

UPS- Uninterrupted Power Supply

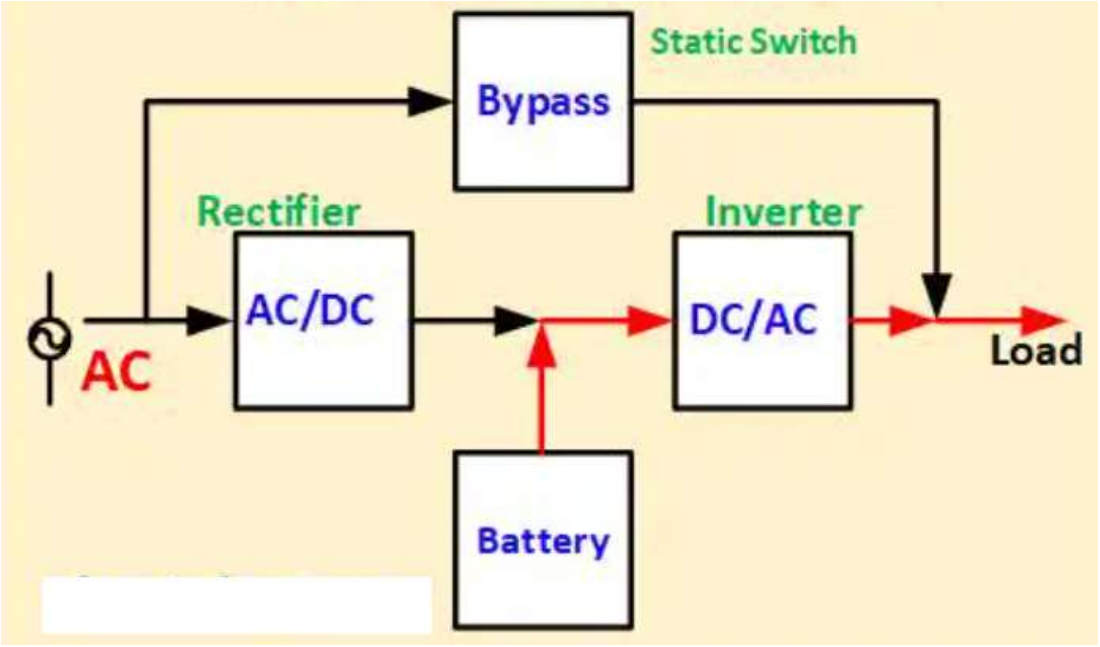
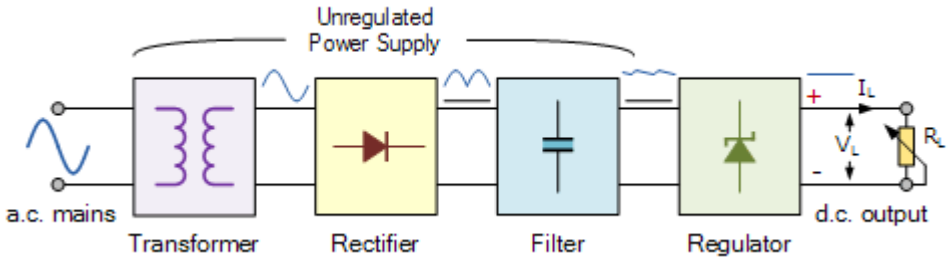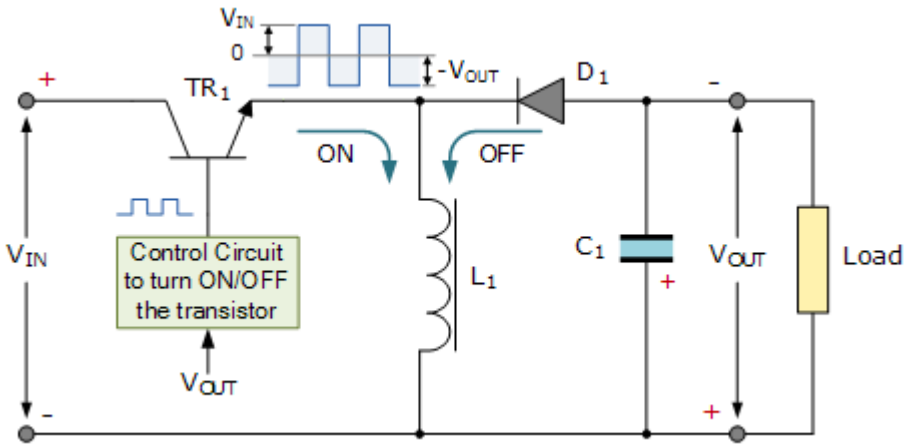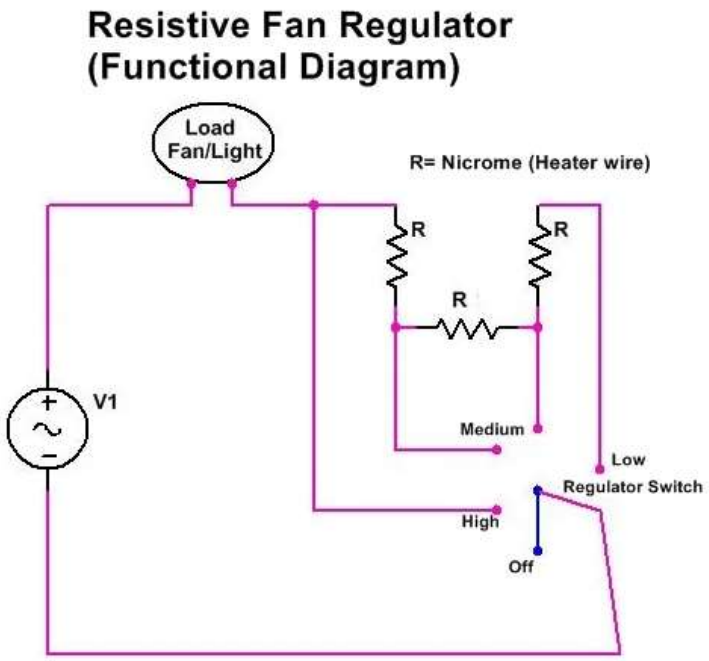
Switch Mode Power Supply